TITLE		
COMPACT SERIES 2000 BTUh - 115VAC AND 230VAC		
SIZE 72 X 54	DWG NO **CS022**	REV - 2/16/2026
SCALE:	WEIGHT:	SHEET 1 OF 1

Filename: tei_cs_022_drwng.dft

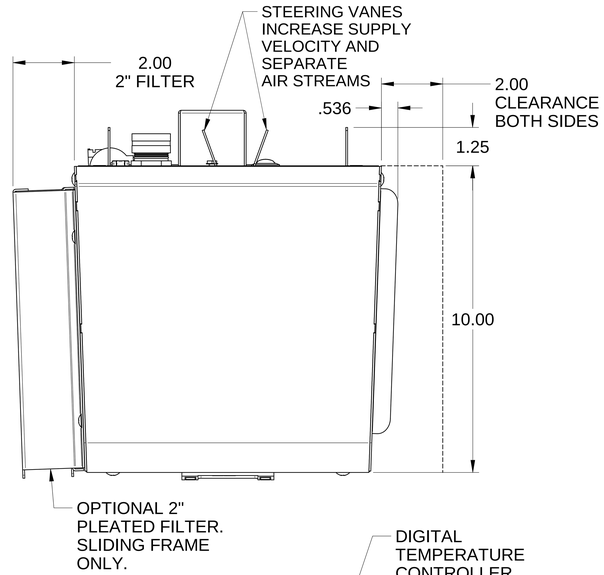

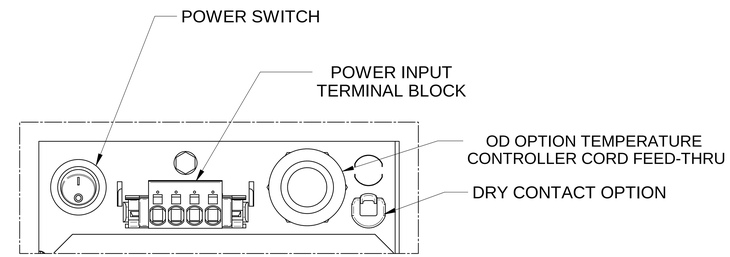

DETAIL A

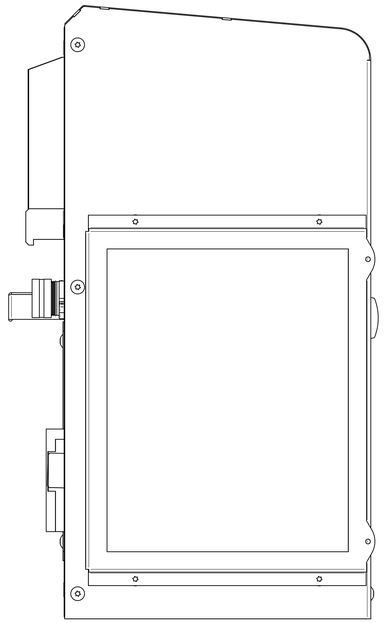

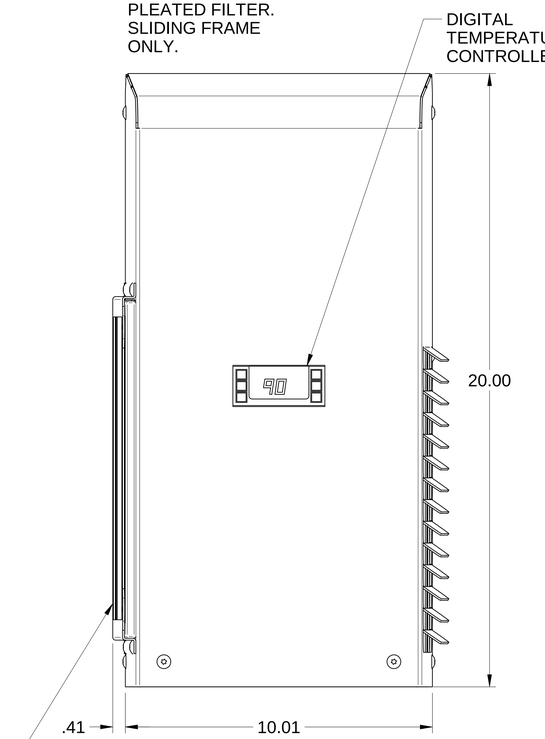

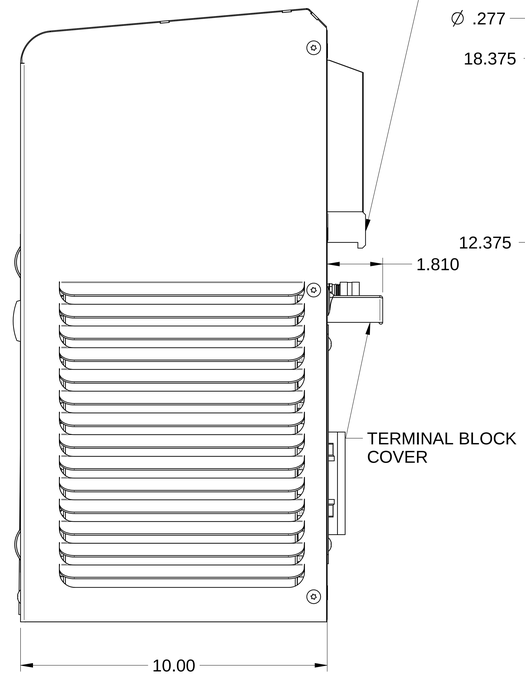

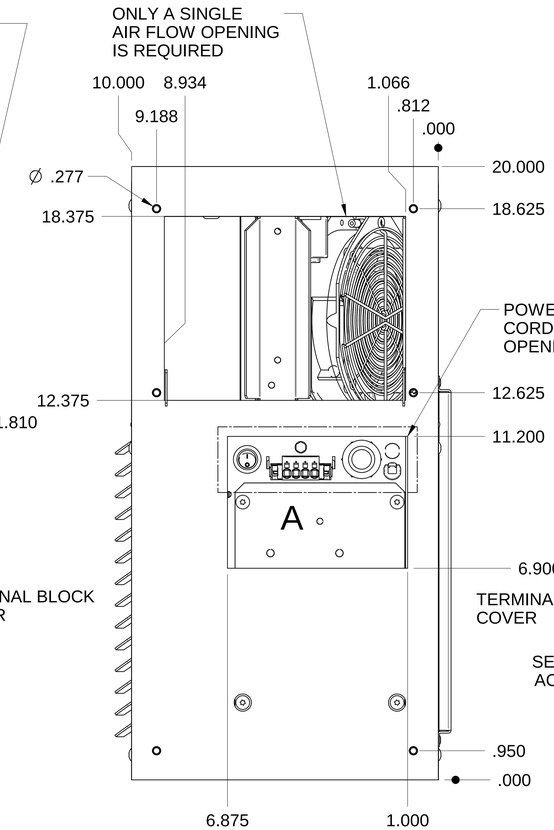

CUTOUT DIMENSIONS
AS VIEWED FROM
INSIDE ENCLOSURE

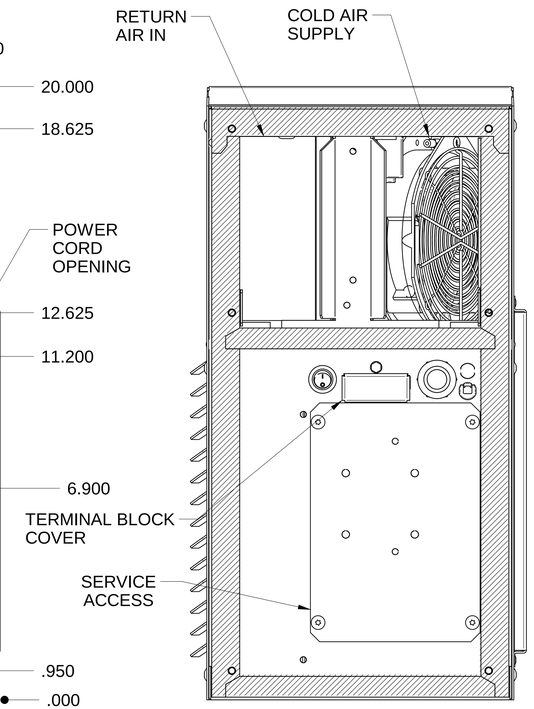

GASKET LOCATION