TITLE	COMPACT SERIES	
SIZE 72 X 54	DWG NO CS020	REV D 12/03/2010
2000 BTUh - 115VAC AND 230VAC		
SCALE:	WEIGHT:	SHEET 1 OF 1

Filename: ac_cs_020_drawing.dft

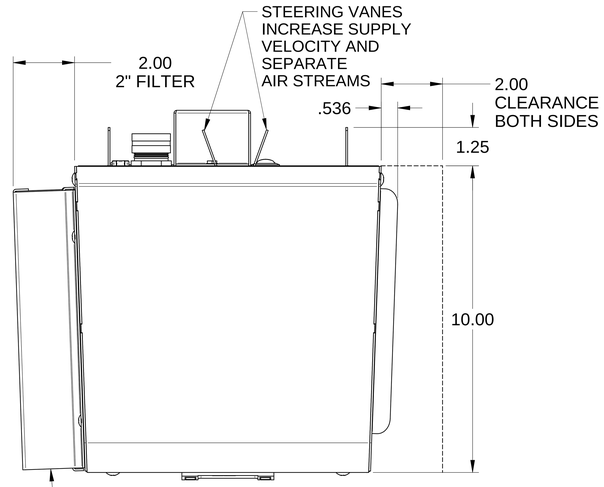

OPTIONAL 2" PLEATED FILTER. SLIDING FRAME ONLY.

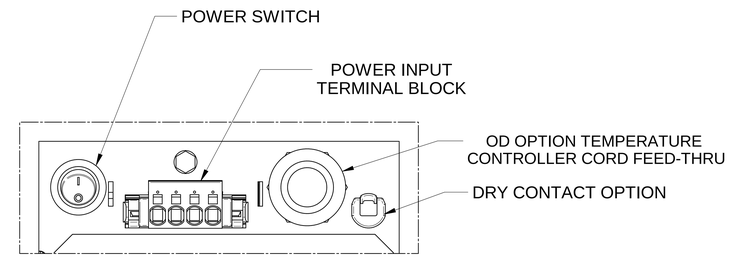

DETAIL A

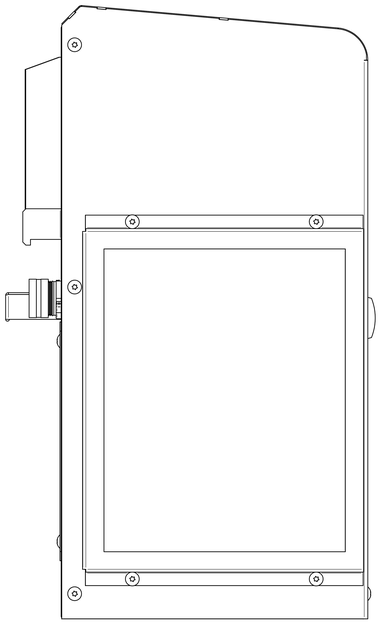

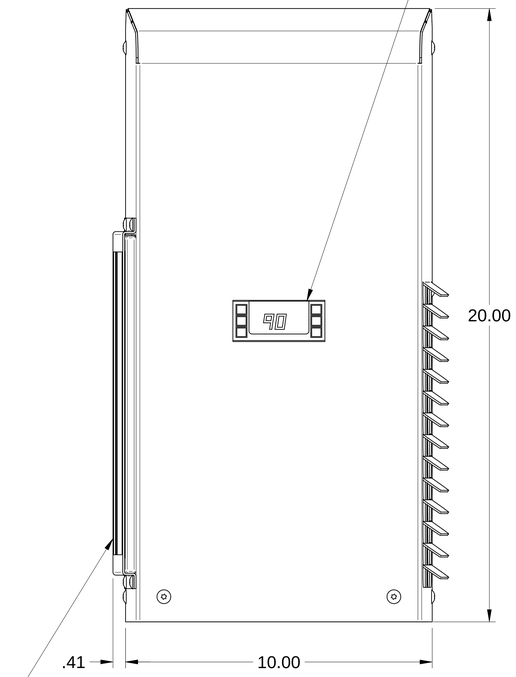

AMBIENT AIR IN.
REUSABLE FILTER:
1) SLIDING FRAME STANDARD
2) OPTIONAL 2" FILTER WITH SLIDING FRAME ONLY

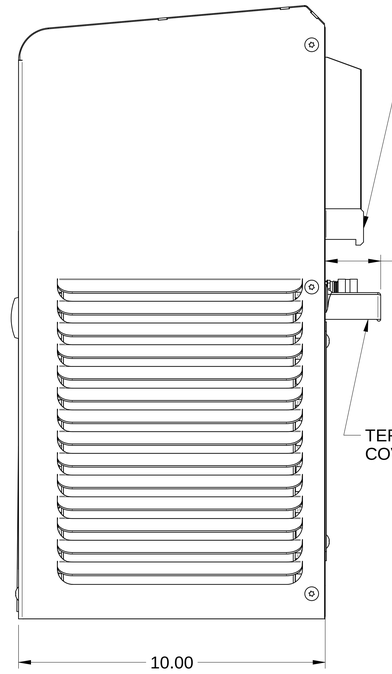

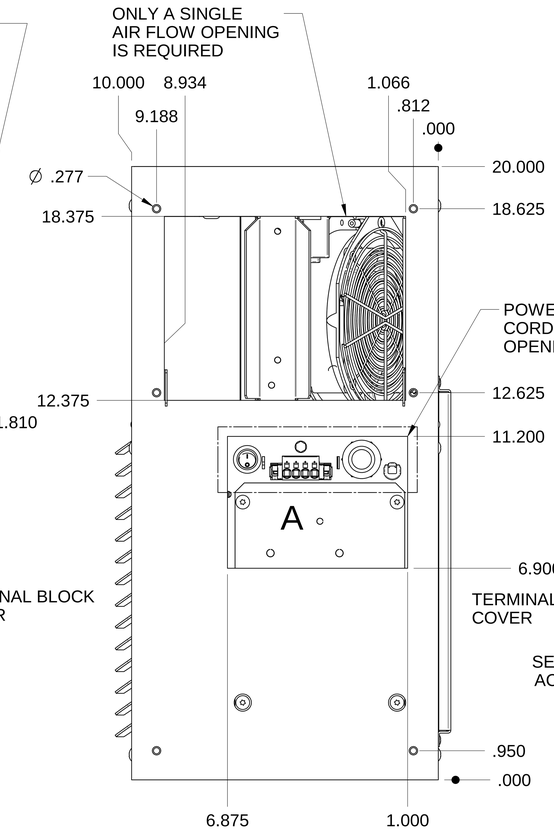

CUTOUT DIMENSIONS AS VIEWED FROM INSIDE ENCLOSURE

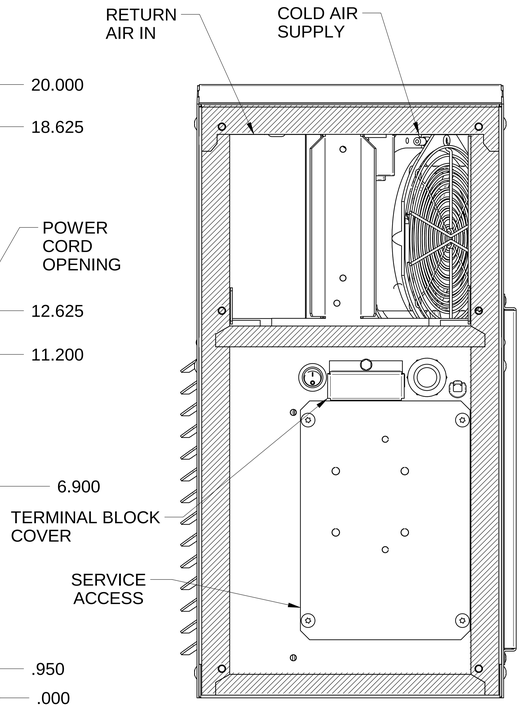

GASKET LOCATION